CONE

interior :: Ceiling recessed

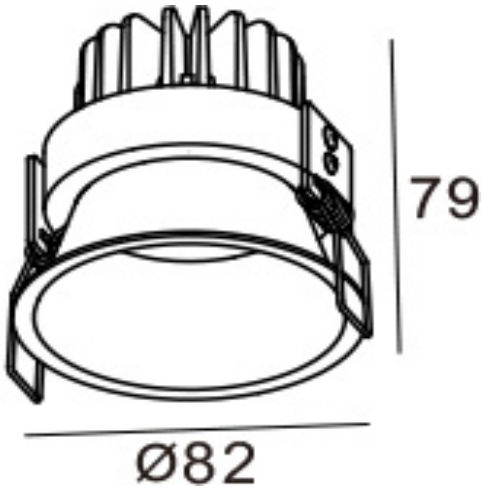

REF	**L3516W/927 Cone White 2700K**
	L3516W/930 Cone White 2700K
	L3516B/927 Cone Black 2700K
	L3516B/930 Cone Black 2700K
LED	**COB**
LED LM OUTPUT	**630lm**
POWER CONS.	7W
CURRENT	700mA 10Vdc Max.
COLOR TEMP.	2700K / 3000K
CRI/GAI	+90
REFLECTOR	36°
FINISH	WHITE RAL 9016 / Black RAL 9005
ADJUSTABLE	N/A
CUT-OUT	Ø 75mm
REMARKS	Blade spring included in package!

Lightpoint NV
Steendam 50
B-9000 Gent
t +32 (0)9 224 23 89
f +32 (0)9 225 65 58
info@lightpoint.be

Lightpoint NV
Westerring 27A
B-9700 Oudenaarde
t +32 (0)55 699 960
f +32 (0)55 699 961
info@lightpoint.be

www.lightpoint.be